Roto Ultra
...moving fluids positively

WE COMPETE
WITH ONLY
ONE PUMP
»»»



ROTO 2K SERIES
& 5H SERIES PUMPS



THE POWER TO MOVE MORE

ROTO 2K SERIES
Heavy Duty Pumps with Robust Gear Joints

The Roto 2K Series pump delivers exceptional value and versatility across various applications. Its advanced gear joint technology efficiently manages radial and thrust loads, ensuring superior performance and extended operational life.

These pumps are built to withstand tough conditions, efficiently handling abrasive materials with over 25% solids.

1. Rotor
Rotor with specialized coatings ensure superior performance and exceptional wear resistance, even in highly abrasive and corrosive operating conditions.

2. Stator
Available in various grades of elastomers.

3. Gear Joint
The uniform design of the ring gear and gear ball components creates greater surface contact, leading to less wear and better overall performance. Roto's rugged gear joint drive train is engineered to withstand high thrust and radial forces, ensuring superior durability in the most critical applications. Joint seals effectively protect the gear joints, ensuring reliable operation and longevity.

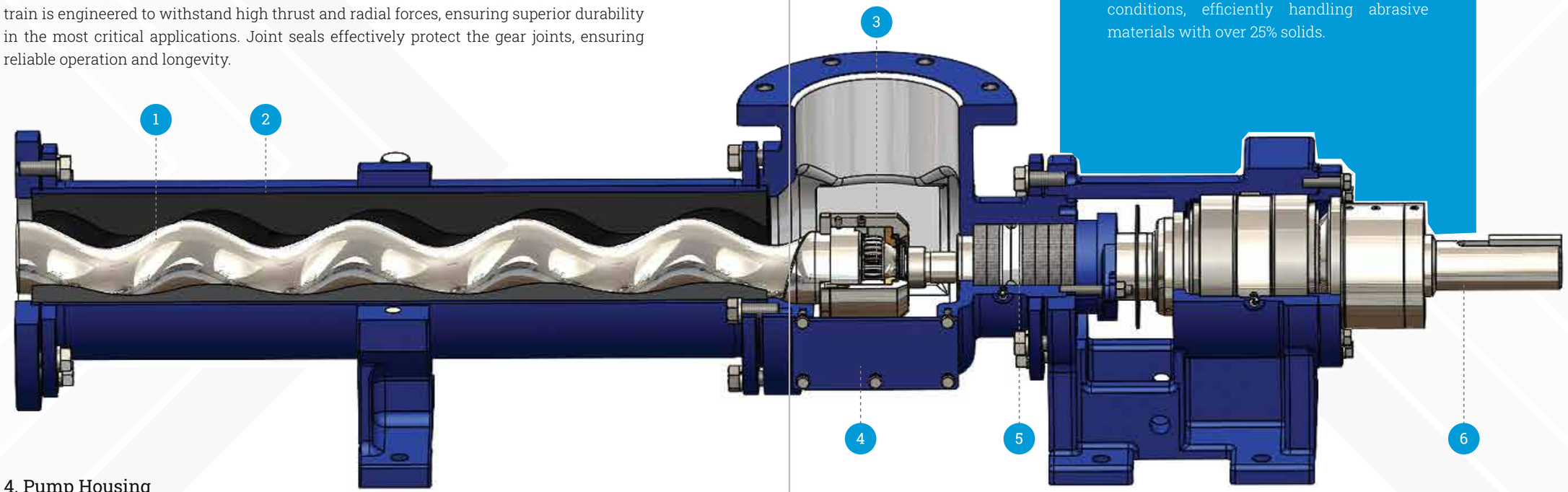

4. Pump Housing
Manufactured from cast iron or stainless steel.

5. Shaft Sealing
Available in Gland Packing and various Mechanical Seals options.

6. Shaft
Its innovative hollow shaft design provides a compact footprint while enhancing bearing and seal life for extended performance.

Performance Summary
Capacity - Up to 560 GPM
Pressure - Up to 175 PSI

*Moyno® is a registered trademark held by Mono and Moyno Pump Technologies. Mono and Moyno Pump Technologies is not affiliated with Roto Pumps North America Inc and does not endorse any products manufactured or supplied by Roto Pumps North America Inc.

Distinctive Features & Benefits

Positive Displacement: Because of the single rotating element, progressing cavities are generated which deliver a uniform, metered & non-pulsating flow. The head developed is independent of the rotational speed, whereas the capacity is proportionate to the speed.

Self-Priming: Inherently self-priming, the pumps can work on snore & do not require a foot valve.

Non-Clogging: Can handle solids in suspension or medias containing a high percentage of solids.

Reversible: Suction lift capabilities of up to 9.5 mwc & effective even in high vacuum conditions.

Low NPSH Requirement: Minimum degradation of shear-sensitive media, and can also handle highly viscous materials having pseudo-plastic characteristics.

Low Internal Velocity: Due to the reversible rotation capabilities, these can perform with equal efficiency in either direction.

Silent Running: Rotors turn inside a resilient stator & thus generate little noise.

Separate Bearing Housing: Fluids can be pumped without contamination.

Applications

Wastewater Treatment

- Primary, Secondary and tertiary sedimentation
- Grit removal
- Nitrification
- Thickening and conditioning
- Dewatering
- Lime slurry dosing
- Filter press & incinerator feeds
- Raw sewage transfer

Chemical Processing

- Caustics & Detergents
- Paints, Inks & Solvents
- Chemical Dosing
- Polymer & Flocculants
- Leaching / Neutralization

WE COMPETE WITH ONLY ONE PUMP

Oil and Gas

- Crude oil transfer
- Oil/water separation

Paper & Coatings

- Adhesives, Latex & Coatings
- Starches, slurries, and coatings

Building Materials

- Gypsum, Plaster & Resins

SC Series Pumps

The Right Fit for Transfer Duties in Domestic and Industrial Applications

Precision-engineered for efficiently handling applications with small capacity and low pressure requirements. These self-priming pumps are ideal for both domestic and industrial use and provide an impressive suction lifts of up to 8 meters. Their simple design and robust construction results in extended pump life with low maintenance. Available in three sizes with maximum capacity of up to 9000 LPH and maximum pressure of up to 50.76 PSI.



Typical Applications

- Drainage Septic tank/cess pits
- Feeding to Garden sprinkler systems/irrigation
- Drawing water from wells, streams and rivers
- Diesel Transfer
- Feeding to oily water separators
- Transfer and dosing of non aggressive chemicals and alkalies
- Transfer of water based inks
- Transfer duties in food processing, winery and Vegetable oils
- Transfer of liquids with small solids in suspension
- Transfer of polyelectrolyte
- Handling surfactants and detergents

Roto PRO Spares

Superior Performance, Perfect Compatibility

Roto Pro spares, including Rotors, Stators, Gear Joints, Shafts, and Connecting Rods, are designed as direct equivalents to Moyno Range of Pumps including 2000 Series, L Frame Series & 500 Series Pumps.

Engineered for precision and durability, Roto spares not only match the originals but exceed them in performance, longevity, and efficiency—ensuring seamless integration and enhanced reliability in your pumping operations.

MOYNO® Retrofit Spare Parts			
Pump Series	1 Stage	2 Stage	3 Stage
2000 Series	1E012	2E012	
	1E021	2E021	
	1F031	2F031	
	1F051	1F052	
	1G065	2G065	
	1G090	2G090	
	1H115	2H115	
	1J175	2J175	4J175
500 Series	344		
	356		
	367		
L Frame	1L3	2L3	3L3
	1L4	2L4	3L4
	1L6	2L6	3L6

Roto Pumps North America Inc.
sales@rotopumps.us | www.rotopumpsna.com